FEMALE END VIEW

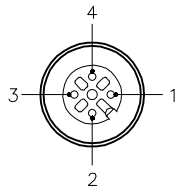

1 = BLUE
2 = BROWN
3 = DRAIN
4 = GREEN/YELLOW

SPECIFICATIONS	
CONTACT MATERIAL/PLATING	BRASS/GOLD
CONTACT CARRIER MATERIAL	TPU OR NYLON
MOLDED PLUG MATERIAL/COLOR	TPU/BLACK
HOUSING MATERIAL/FINISH	STAINLESS STEEL
RATED CURRENT [A]	4.0 A
RATED VOLTAGE [V]	250 V
OUTER JACKET MATERIAL/COLOR	PVC/BLUE
CONDUCTOR INSULATION MATERIAL	PVC
CONDUCTORS	3x18 AWG
DRAIN/SHIELD	20 AWG/ALUMINUM-POLYESTER FOIL
TEMPERATURE RATING	-40°C to +105°C (-40°F to +221°F)
PROTECTION CLASS	MEETS NEMA 1,3,4,6P AND IEC IP67
CONDUCTOR ARRANGEMENT	1 SHIELDED TWISTED PAIR, 1 GROUND, 1 DRAIN
CABLE RATINGS	UL: ITC/PLTC/AWM, 105°C, 300 V CSA: CMG/AWM, 105°C, 300 V

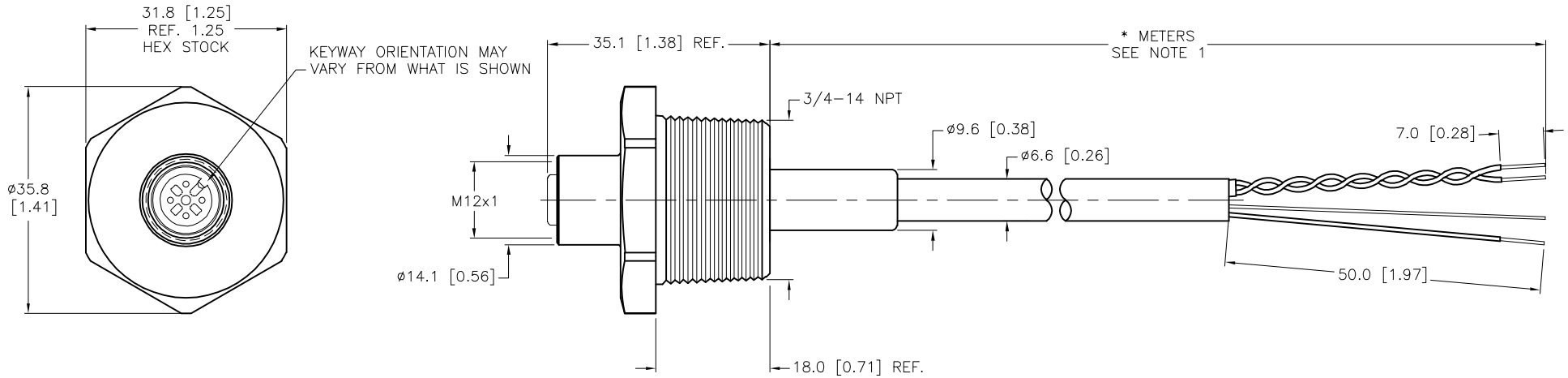

CABLE LENGTH	TOLERANCE *
ALL LENGTHS	+ 4% (OR 50mm) OF LENGTH - 0% (OR 0mm) OF LENGTH WHICHEVER IS GREATER
STRIP LENGTH	**TOLERANCE ***
0-7mm	±0.5mm
8-29mm	±1.0mm
30-49mm	±2.0mm
50-69mm	±3.0mm
70-100mm	±4.0mm
OVER 100mm	±5.0mm
*** UNLESS OTHERWISE SPECIFIED**	

SOURCE DRAWING - FOR REFERENCE ONLY

NOTES:

1. "*" DESIGNATES CABLE LENGTH IN METERS. CONTACT TURCK TO ORDER SPECIFIC LENGTHS.

REV	DESCRIPTION	BY	DATE	ECO NO.
B	UPDATE KEYWAY & NOTE	NF	10/02/24	80714

RELATED DOCUMENTS
1.
2.
3.
4.

3RD ANGLE PROJECTION

THIS DRAWING IS CONFIDENTIAL AND THE PROPERTY OF TURCK INC. USE OF THIS DOCUMENT WITHOUT WRITTEN PERMISSION IS PROHIBITED.

TURCK
3000 CAMPUS DRIVE
MINNEAPOLIS, MN 55441
1-800-544-7769
(763) 553-7300
(763) 553-0708 fax
www.turck.us

MATERIAL: SEE SPECIFICATIONS

FINISH: SEE SPECIFICATIONS

ALL DIMENSIONS DISPLAYED ON THIS DRAWING ARE FOR REFERENCE ONLY

CONTACT TURCK FOR MORE INFORMATION

DRFT: GB | DATE: 05/13/04
APVD: T.S. | SCALE: 1=1.0

UNIT OF MEASUREMENT
MILLIMETER [INCH]
DO NOT SCALE THIS DRAWING

DESCRIPTION: P-FKV 4-950-*/14.75/NPT

IDENTIFICATION NO.

REV: B

FILE: 777004246

SHEET 1 OF 1